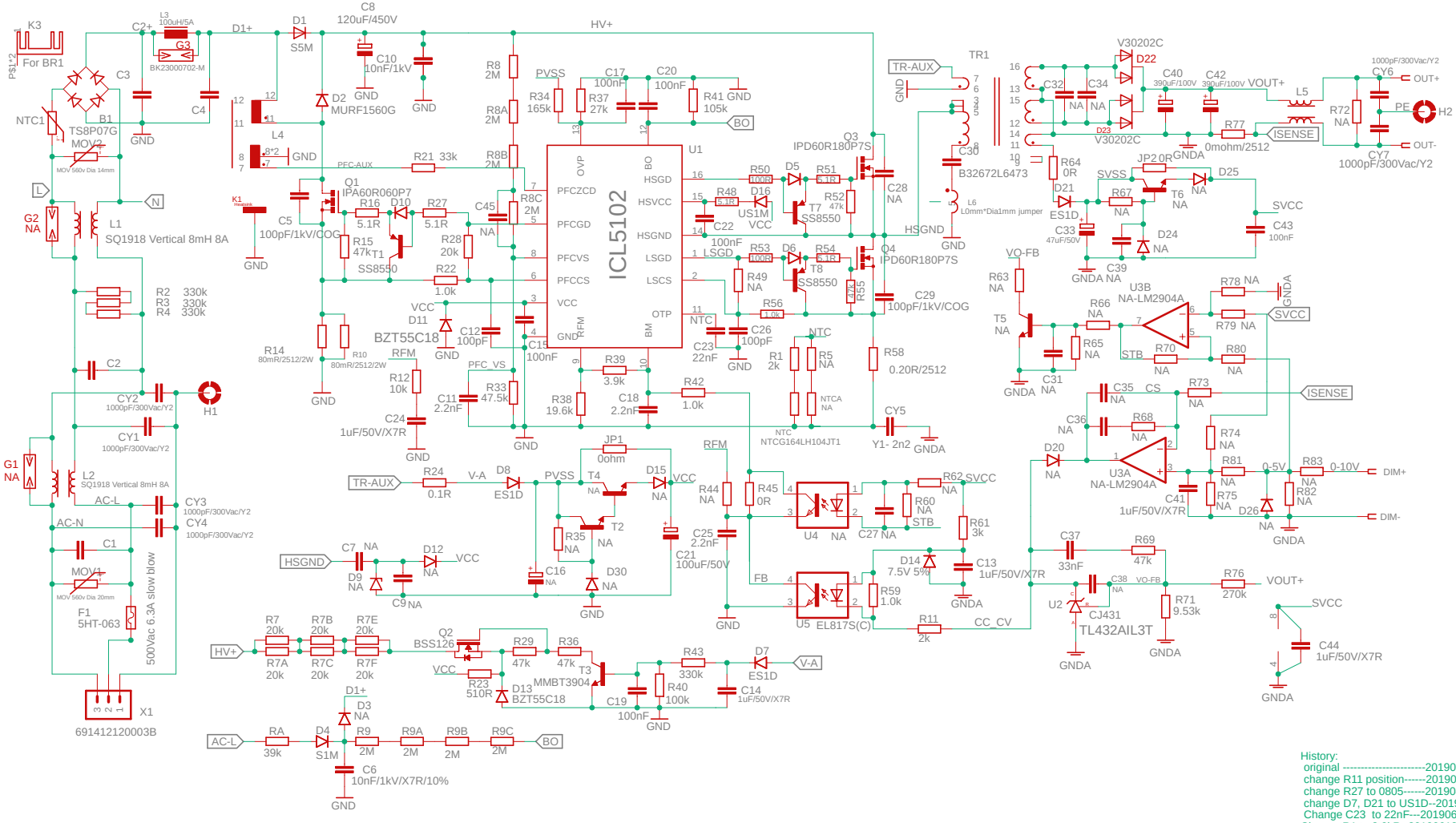
ICL5102
U1
HV+
PFC-AUX
PFC_VS
VCC
HSGND
GNDA
ISENSE
VOUT+
SVCC
VO-FB
CC_CV
TR-AUX
For BR1
L
N
H1
H2
X1
691412120003B
500Vac 6.3A slow blow
SQ1918 Vertical 8mH 8A
BZT55C18
SS8550
IPA60R060P7
IPD60R180P7S
IPD60R180P7S
MURF1560G
S5M
ES1D
US1M
MMBT3904
BSS126
EL817S(C)
TL432AIL3T
CJ431
B32672L6473
NTCG164LH104JT1
NA-LM2904A
0mohm/2512
0.20R/2512
Y1- 2n2
100pF/1kV/COG
1000pF/300Vac/Y2
BK23000702-M
TS8P07G
MOV2
MOV1
F1
5HT-063
CY1
CY2
CY3
CY4
CY6
CY7
L1
L2
L3
L4
L5
L6
L0mm*Dia1mm jumper
TR1
B1
K3
K1
Q1
Q2
Q3
Q4
T1
T2
T3
T4
T5
T6
T7
T8
U2
U3B
U3A
U4
U5
D1
D2
D3
D4
D5
D6
D7
D8
D9
D10
D11
D12
D20
D21
D22
D23
D24
D25
D26
D30
C8
C10
C11
C12
C15
C16
C17
C18
C19
C20
C21
C22
C23
C24
C25
C26
C27
C28
C29
C30
C31
C32
C33
C34
C35
C36
C37
C38
C39
C40
C41
C42
C43
C44
C45
C5
C6
R8
R8A
R8B
R8C
R21
R22
R27
R28
R33
R34
R37
R38
R39
R41
R42
R44
R45
R48
R49
R50
R51
R52
R53
R54
R55
R56
R58
R61
R62
R63
R64
R66
R67
R69
R71
R72
R73
R74
R75
R76
R77
R78
R79
R80
R81
R82
R83
JP1
JP2
PVSS
RFM
STB
VCC
GND
BO
AC-L
AC-N
SPEC:
Input: 90-305Vac
Ouptut:CV73.2Vmax 4.37A(320W)
Caution:
-Keep mornitoring during varification test;
-Please use insulated power source for input during testing;
-Do not touch any conductive parts to avoid electric shock and thermal damage when input connected;
- Do not cover the driver; With input<110Vac, cooling fan is necessary or thermal protection might happen.
History:
original ----------20190418;
change R11 position------20190419;
change R27 to 0805------20190428;
change D7, D21 to US1D--20190531;
Change C23 to 22nF---20190613;
Change R1 to 2.0kR--20190613;
Change R38 to 19.6kR--20190613;
Change R7, R7A-R7E to 20kR-20190613;
Target: Constant Votlage 73V , 320W max
TITLE: 320W-LLC-73V-CV-EAGLE- PCB-SCH-V0.9-20190620
Document Number:
REV:
Date: 20.06.2019 10:57
Sheet: 1/2

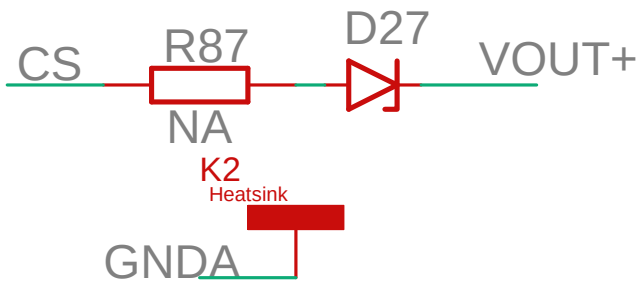
CS
R87
NA
D27
VOUT+
K2
Heatsink
GNDA

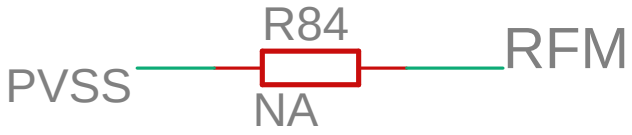
PVSS
R84
NA
RFM

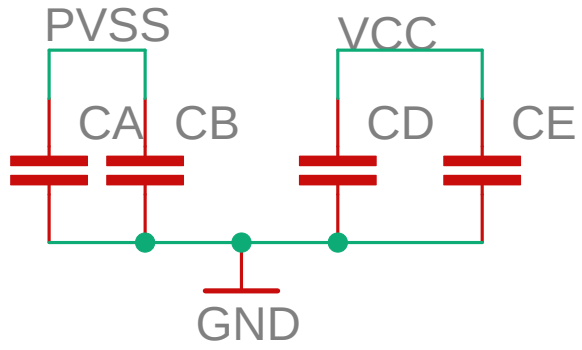
PVSS
CA
CB
VCC
CD
CE
GND